Check for updates

Received: 10 June 2022 | Revised: 26 October 2022 | Accepted: 4 January 2023

DOI: 10.1049/stg2.12101

IET Smart Grid

The Institution of Engineering and Technology WILEY

REVIEW

# Overview of battery energy storage systems readiness for digital twin of electric vehicles

**Rolando Gilbert Zequera** | **Anton Rassõlkin** | **Toomas Vaimann** | **Ants Kallaste**

Department of Electrical Power Engineering and Mechatronics, Tallinn University of Technology, Tallinn, Estonia

**Correspondence**

Rolando Gilbert Zequera, Department of Electrical Power Engineering and Mechatronics, Tallinn University of Technology, Ehitajate tee 5, 12616 Tallinn, Estonia.
Email: rogilb@ttu.ee

**Funding information**

Eesti Teadusagentuur, Grant/Award Number: PSG453

**Abstract**

The demand for energy is a relevant topic in the field of science and engineering, which has been discussed throughout the last years due to the challenges of climate change and environmental concerns around the world. Currently, electric vehicles (EVs) offer a source of mobility that emphasises the use of energy storage devices to reduce $CO_2$ emissions. The growing development of advanced data analytics and the Internet of Things has driven the implementation of the Digital Twin (DT), all to improve efficiency in the build, design and operation of the system. Regarding the components of EVs, the batteries are considered as the most expensive elements to analyse according to the State of Health and the State of Charge, which lead to implement the most optimal models, along with a DT for battery systems. The present article provides a literature review about the current development trends of EVs' energy storage technologies, with their corresponding battery systems, which gives an overview to understand different type of models and to identify future challenges in the industrial sector. Additionally, a solid explanation of the DT focussed on battery systems for EVs is discussed, highlighting some study cases, characteristics, and technological opportunities.

**KEYWORDS**

artificial intelligence and data, battery powered vehicles, electric vehicles

## 1 | INTRODUCTION

The electric market has been a point of concern in the research and development (R&D) field across the world, which has given the potential use of electric vehicles (EVs) to support climate change emissions and improve the way of living. It has been a growing trend of EVs since the last decade due to several advantages and economic benefits they offer. In 2021, Sanguesa et al. [1] conducted a study that shows the current challenges and technologies for EVs; among the most important contributions, we find the simplicity and reliability of the manufacturing maintenance, operation efficiency, accessibility, comfort, and zero emissions. It is important to mention that EVs have been classified into several categories based on propulsion technologies. According to Refs. [1–3], the five categories are listed as follows :

- Battery EVs: This type of vehicle works using electric power; therefore, neither an internal combustion engine nor a liquid fuel is used in the operating mechanism
- Plug-in-hybrid EVs: Have the characteristics of being propelled by both an electric engine charged by a pluggable external source and a conventional combustible engine. It is fundamental to specify that this category of vehicles can be connected to the grid, which contributes to the reduction of fuel consumption in regular driving scenarios.
- Hybrid EVs: This category of vehicles is mobilised through electric and conventional motors, the battery that provides

This is an open access article under the terms of the Creative Commons Attribution License, which permits use, distribution and reproduction in any medium, provided the original work is properly cited.

© 2023 The Authors. *IET Smart Grid* published by John Wiley & Sons Ltd on behalf of The Institution of Engineering and Technology.



25152947, 0, Downloaded from https://ietresearch.onlinelibrary.wiley.com/doi/10.1049/stg2.12101 by Tallinn University of Technology, Wiley Online Library on [07/02/2023]. See the Terms and Conditions (https://onlinelibrary.wiley.com/terms-and-conditions) on Wiley Online Library for rules of use; OA articles are governed by the applicable Creative Commons License

energy to the electric motor has the mechanism of being charged due to the one generated in the vehicle's combustion engine

- Extended-range EVs: This vehicle is equipped with a supplementary combustion engine that enables it to charge the battery when it is needed. It is important to say that the main difference in comparison with the plug-in hybrid and hybrid EVs relies on the engine that is used for charging purposes. Consequently, it does not integrate the connection of the wheels' vehicle.
- Fuel Cell EVs: This vehicle is provided with a fuel cell that works through chemical reactions, using a mix of compressed hydrogen and oxygen obtained from the air.

One of the most critical elements of EVs is the batteries, which are expensive components that not only affect the overall cost but also their capacity and charging time. According to Ref. [4], the most expensive element in the EV is the battery pack. Regarding the performance of the battery in EVs, there are several challenges and limitations that have been a point of interest for the scientific community, which are bulk and weight, charging time, driving range, and battery cost. In the following sections, the challenges will be analysed and discussed to familiarise the reader with the aim and focus of this research.

Currently, academic and industrial R&D institutions are focussed on different issues related to EVs' storage systems, some of which are the application of modelling to understand not only physical behaviour, but also the engineering framework of the system. According to the literature review, there are different categories of battery models, which are based on the properties of the batteries, available data, physical interpretation, mechanical and thermal analysis etc. [5]. This study will focus on three main categories, which are electrochemical, electrical, and mathematical, all because of the promising applications that are applied using these models in the sustainable and renewable field.

Electrochemical models are defined as the most complex and precise due to the thermodynamic and kinetic phenomena that explain the behaviour of the cell. Mass transfer, diffusion, ion distribution, and electrode theory implement time-dependent differential equations, which require high computing performance, so order-reduced methodologies and parameter model identification are considered challenging tasks to accomplish during this model implementation [5].

Mathematical models have been classified into two main categories: stochastic and empirical [6]. Empirical models describe the specific behaviour of the system using mathematical equations with certain boundary conditions and initial parameters that accomplish real-time parameter identification; however, these models have the disadvantage of achieving errors in the range of 5%–20% [5]. Stochastic models, on the other hand, provide accurate performance and fast speed that are based on the discrete-time Markov chain. Nonetheless, a hybrid methodology is required to apply parameter identification, which in some cases increases the complexity of the model [5].

Electrical models are based on equivalent circuit analysis that recreates the operating system of the batteries; it is fundamental to point out that this category of models is faster than electrochemical models but has the drawback of neglecting high parameters in detail, such as dynamic behaviour [6].

The increasing development of EVs provides the way for new technologies that complement the application of battery models to monitor not only the physical system but also the operation process in real time; therefore, the innovative and promising DT is emerging to strengthen both sustainability and Internet of Things (IoT) fields.

Since the year 2003, the concept of DT has been evolving and experiencing several definitions in the literature review, which consistently creates a lack of consistency and dilutes the concept not only for the research sector but also for industrial applications. In 2020, Jones et al. published a research paper that explains and illustrates the concept of DT [7], which is mainly defined by the CIRP Encyclopaedia of Production Engineering as follows [8]:

A DT is a digital representation of an active unique product (real device, object, machine, service, or intangible asset) or unique product-service system (a system consisting of a product and a related service) that comprises its selected characteristics, properties, conditions, and behaviours by means of models, information, and data within a single or even across multiple life cycle phases.

Several scientific studies have been conducted to expand the knowledge of DT and its applications in Energy Storage Systems (ESSs) to improve the building, design, and operation of EVs. In 2020, Li et al. [9] developed a Battery Management System (BMS) to build up a DT that diagnoses the SOC and SOH. In the same manner, Wu et al. [10] pointed out the promising connection between data and artificial intelligence to create a battery digital twin, and in 2021, Singh et al. [11] identified different efforts and proposed future academic and industrial research to implement functionalities and benefits of the battery DT.

Recently, significant novelties have been implemented in the field of BESSs, Smart electric vehicles, and DTs applications, which correspond to face climate change mitigation by reducing $CO_2$ emissions, specifically in the transport industry through mobility systems. Contributions in the framework of DTs for smart electric vehicles have been discussed in Ref. [12], in which the authors classified the review into specific domains and explored different challenges. The benefits of BESSs to achieve energy transition have also been reviewed in the scientific literature [13], not only limited to EVs, but also implemented in energy-based microgrids for optimal frequency, voltage, and loadings based on operating limits [14]. It is necessary to point out that the accuracy of the DT is expected to continue the development of battery communication in Smart Grids, Battery Swapping Systems, and Renewable sources [15], all this to assess new methodologies that assess the operation of a BMS to deliver a safe, reliable, and efficient energy demand [16].

25152947, 0, Downloaded from https://ietresearch.onlinelibrary.wiley.com/doi/10.1049/stg2.12101 by Tallinn University of Technology, Wiley Online Library on [07/02/2023]. See the Terms and Conditions (https://onlinelibrary.wiley.com/terms-and-conditions) on Wiley Online Library for rules of use; OA articles are governed by the applicable Creative Commons License

The implementation of mathematical modelling to different battery types is a complex and challenging task, which is necessary to understand the boundaries of the system, operating conditions, and assumptions. However, this topic is beyond the scope of this research; therefore, the reader is encouraged to consult the corresponding references finally that illustrate and exemplify the background of battery modelling in specific detail.

It is fundamental to point out that the problem statement is defined as the implementation of the most optimal battery model for EVs based on a DT technology, which will be discussed in the following sections, considering battery properties, engineering methodologies, and computational algorithms. The motivation of this work is based on the future application of robust models through Data-Driven approaches to improve the performance of EVs, so that further analysis and innovative mechanisms are required.

Major contributions of this work are summarised in the following points.

- The most relevant problems of ESS are mentioned, providing a summary of scientific contributions in the field of battery types for EVs applications, focussing on chemical properties and operating mechanisms.
- A mathematical framework of battery modelling is explained, considering the main advantages and drawbacks of each implementation.
- Trends and opportunity areas of DTs for BESSs are described, all to establish the connection between the physical and virtual entities based on computational algorithms for life cycle assessment.

Finally, a discussion regarding future applications and promising advances will be provided, all to encourage the continuation of the research within the actual framework.

## 2 | ESS AND BATTERY TECHNOLOGIES FOR EV

The increasing development of ESS has led to the application of modern technologies in the energy sector, climate change being a point of concern for the next generation. The specific use of energy determines the classification of different ESSs, which are divided into mechanical, electrochemical, electrical, thermal, and hybrid [17]. Mechanical ESSs are pumped hydro storage, compressed air energy storage, and flywheel energy storage, which contribute to approximately 99% of the world's energy storage capacity [18]. Electrochemical ESSs are devices that transform electrical to chemical energy and vice versa through a reversible process, having a dual function that is based on storing and releasing electrical energy; these technologies are classified as Flow Batteries (FB) and Secondary (rechargeable) batteries. Chemical Storage Systems are defined as technologies that through the use of chemical reactions store and release energy in the energy system. According to Ref. [18], the main category is Fuel Cells, which can be Hydrogen Fuel Cell and Metal-Air Fuel Cell. Finally, the last categories of ESSs are Electrical, Thermal, and Hybrid; the first ones have the feature to store energy in the form of electrical field by separating magnetic field by flux or charges, so Ultracapacitors and Superconducting Magnetic Coil are Electrical ESS; the second category has the ability to store energy from the solar or electric heater to be used in electricity generation plants based on different heating purposes [18–21]; Latent Heat Storage, Sensible Heat Storage, and Thermochemical Sorption Storage are considered as Thermal ESS. Finally, in the case of Hybrid ESS, these technologies combine the features of specific ESS to provide the optimal performance of the system, such as power density, power density, life cycle, energy density, and cost [22].

In this article, the focus is based on the electrochemical devices, which correspond to the implementation of batteries for electric vehicle applications. A brief description is given as follows [1]:

- Lithium–ion batteries (Li-ion): These batteries operate through reversible chemical reactions, provided by a lithium salt as an electrolyte between the cathode and anode. The charging mechanism works through the intercalation of lithium ions from the positive to the negative electrode through the electrolyte; for the discharge process, the lithium ions move in the opposite direction [23]. Operating conditions are specified in the range of −20°C to 150°C and installed in the majority of EVs, especially in PHEVs. Li-ion batteries have the advantage of internal resistance, lightness of their components, and high loading capacity that are complemented by their high loading and unloading cycles. An essential property of this category of batteries is its durability. One important reason related to the degradation that occurs in several proportions depends on the operating conditions, so high amperage, overcharge, and high or low operating temperatures are crucial factors to consider for the maintenance of Li-ion key properties [23].
- Zinc–bromine batteries ($Zn–Br_2$): This technology works using a zinc-bromine solution, which is stored in two tanks and has the effect of turning bromide into bromine in the positive electrode. The operating temperature is found from 20°C to 40°C and cell voltage 1.79 V, considered an attractive battery system due to its chemical simplicity, good energy density, high degree of electrochemical reversibility, and abundant low-cost materials [24].
- Lead-acid batteries ($Pb–PbO_2$): According to Ref. [1], this type of battery is the oldest category of rechargeable battery; the composition is integrated by a group of lead plates and a sulphuric acid deposit. The operating mechanism works by an initial loading process, in which lead oxide ($PbO_2$) is formed on the positive plates and lead sulphate on the negative plates, having a working temperature in the range of −20°C to 45°C and 2.1 V cell voltage It is important to note that $Pb-PbO_2$ batteries are used in both conventional and electric vehicles, having low specific density and energy ratios. Among the main advantages of this device, we can find the low cost, simplicity, and effective technological process in effective recycling [25].

25152947, 0, Downloaded from https://ietresearch.onlinelibrary.wiley.com/doi/10.1049/stg2.12101 by Tallinn University of Technology, Wiley Online Library on [07/02/2023]. See the Terms and Conditions (https://onlinelibrary.wiley.com/terms-and-conditions) on Wiley Online Library for rules of use; OA articles are governed by the applicable Creative Commons License

- Nickel–metal–hydride batteries (Ni–MH): This category of batteries has the characteristic of using hydrogen for negative electrodes, unlike the use of cadmium [7]; in the same way, an advantageous characteristic is the high level of self-discharge compared to Nickel-Cadmium batteries. Operating temperatures are in the range of 0°C–50°C and cell voltage is 1.35 V, leading to its extensive use in HEVs. Ni-MH batteries have the potential to offer durability, abuse tolerance, environmental friendliness, and compact size, all of which have been expanding over time in the propulsion and telecommunications market. Compared to lithium-ion batteries, Ni-MH batteries have a higher volumetric energy density, and future applications lie in wearable electronic devices, wearable displays, and medical devices [25].
- Sodium sulphur batteries (Na–S): They are composed of sodium liquid (Na) and sulphur (S). The main contributions of this technology are high loading and unloading efficiency, long life cycle, and high energy density. One main advantage of this technology is the possibility to work at high operating temperatures in the range between 300°C and 350°C; additionally, the fabrication materials have a low cost. The corresponding cell voltage of this battery is 2.08 V.
- Sodium chloride and nickel batteries (Na–NiCl): These batteries have the potential to save energy up to 30% in low operating temperatures, which give a potential use for EVs [26]; however, it is important to mention that the optimum operating temperature is found between 260°C and 300°C and the cell voltage corresponds to 2.58 V. This type of battery was used for the British manufacturer Modec, which disappeared in 2006.
- Nickel–cadmium batteries (Ni–Cd): These batteries have the advantages of efficient energy density. However, low lifespan, high memory effect, and expensive cost of Cadmium are considered as the main disadvantage; thus, the use of Ni-MH batteries is currently taking effect as a strategy of replacing Ni–Cd batteries. Operating temperatures are found in the range of 0–50°C and the cell voltage is 1.35 V.

Regarding the challenges and research opportunities of ESS technologies for EVs, Sanguesa et al. [1] provided potential applications in the following areas.

- Manufacturing processes: In this case, the opportunities focus on improving batteries and components to increase the efficiency of processes, such as energy density, durability, and stability. Modern technologies have been sought; among the most important, we find Sodium Air ($Na_2O_2$), Aluminium Air, Lithium Iron Phosphate, and Magnesium Ion; the first has the potential to multiply the autonomy of lithium batteries 13 times [27] and offers the possibility of having sodium as the sixth most abundant element on Earth [21]; the second had an affordable price of €300/kWh in 2021 [28] and their main advantage is that they are recyclable. Iron and Lithium Phosphate offers high durability that is in the range of 20,000–100,000 cycles and tolerates elevated temperatures [2]; finally, the Magnesium Ion batteries are a promising technology that according to Zhao et al. [29], store more than double the load and increase stability, being a current research point for prestigious institutions, such as TOYOTA, NASA, and the Advanced Research Projects Agency-Energy (ARPA-E) [30].
- Optimisation of the charging process: It has been stated that one of the most important problems in the charging process when installing an EV is the connector. In 2021, Sanguesa et al provided a review of the future challenges concerning EVs [1]. They pointed out that installing a universal connector, applying intelligent algorithms, and the possibility of using a wireless charger are the most promising alternatives; however, highly associated costs, unstable electricity prices in some countries, and the lack of a standard wireless charging technology complicate the optimal charging process.
- Improvement of the mobility system through artificial intelligence: Applications of Artificial Intelligence Algorithms have been developing in recent years not only to improve the performance of the battery components but also to allow wireless communication and intelligence to the vehicles; the latter is expected to revolutionise the transport system in the coming years. It is necessary to point out that the algorithms must be applied to certain components to maintain the optimal operation, especially in the electrical, mechanical, and thermal domains. Several authors have been considering new and crucial indicators to achieve optimal performance; in 2020, Panahi et al. proposed an Artificial Neural Network (ANN) algorithm that considers user habits as historical data to predict charge coordination by electricity demand [31]. In the same way, Park et al. proposed an ANN method to reduce energy consumption by improving thermal management systems [31].
- Green energy and sustainability issues: Regarding sustainability and environmental conditions, according to Ref. [1], the potential applications rely on three important stages: (I) application process, (II) usage throughout the lifetime period, and (III) recycling and disposal processes. In the first point, the fabrication process involves the production of batteries that involves mining and processing minerals, an energy concern that produces an estimated quantity of 150–200 kg of $CO_2$ emissions [1]. Concerning the usage of EVs, an important indicator is based on the high amount of electricity that is required to charge vehicles' batteries during the deployment stage; this is due to the power generation that is produced by fossil fuel-power plants [1]. Finally, disposal and recycling provide an opportunity for the successful implementation of EVs, a fundamental driver to reduce costs, promote sustainability of high-value materials, and increase lifetime [32].

A summary of the ESS classification, battery types, challenges, and opportunities is summarised in the following figures with their respective references (Figures 1–3).

25152947, 0, Downloaded from https://ietresearch.onlinelibrary.wiley.com/doi/10.1049/stg2.12101 by Tallinn University of Technology, Wiley Online Library on [07/02/2023]. See the Terms and Conditions (https://onlinelibrary.wiley.com/terms-and-conditions) on Wiley Online Library for rules of use; OA articles are governed by the applicable Creative Commons License

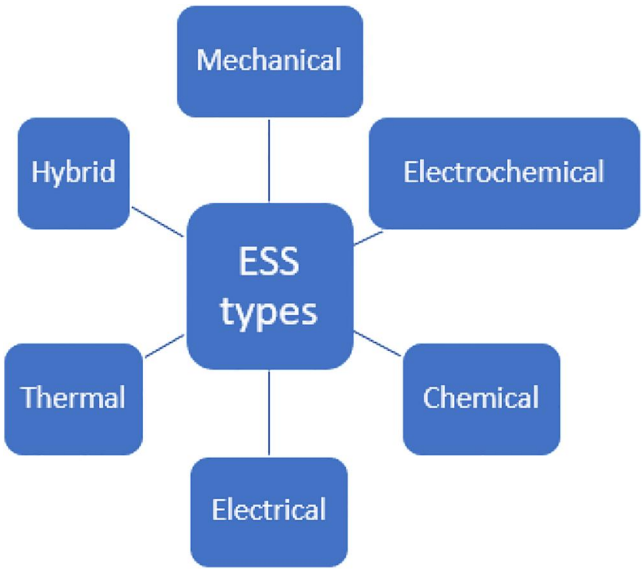


**FIGURE 1** Summary of the different energy storage system types [17–22].

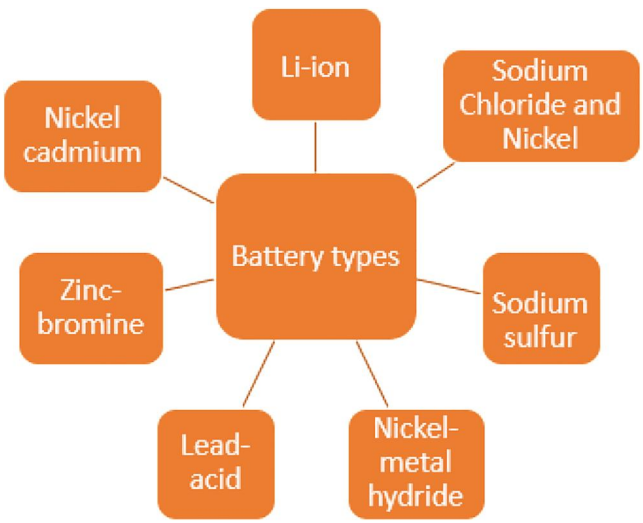


**FIGURE 2** Classification of different battery types [1, 23–26].

**FIGURE 3** Challenges and research opportunities [1, 2, 27–32].

## 3 | BATTERY MODELS FOR EVS

According to the degree of physical insight, the battery models can be classified into 3 main categories, which are the white box model, grey box model, and black box model [33]. White box models can be Pure-Electrochemical or Electrochemical, Grey box models are based on the Equivalent Circuit Model (ECM), and finally, Black box models have a mathematical framework and apply Artificial Intelligence algorithms [33].

### 3.1 | Electrochemical models

Electrochemical models explain the behaviour of chemical reactions that occur in the electrodes and deployed electrolytes [33]. Solving partial differential equations require a high computational level. However, some scientific approaches have been developing in recent years; one of them is the Composite Battery Model developed by Ding et al. [34].

In the Composite Battery Model, the SOC is considered as a variable of state 'x' in the system, $x_k$ is the number of state vectors, and $y_k$ is the voltage of the battery and the output variable. The Composite model is expressed by the 3 following electrochemical models [34]:

Shepherd model

$$y = E_0 - Ri_k - \frac{K_1}{x_k} \tag{1}$$

Unnewehr universal model:

$$y = E_0 - Ri_k - K_2 \cdot x_k \tag{2}$$

Nerst model

$$y_k = E_0 - Ri_k + K_3 \cdot \ln(x_k) + K_4 \cdot \ln(1 - x_k) \tag{3}$$

In this case, $i_k$ is the instantaneous current at time 'k', $E_0$ is the variable Open Voltage Circuit (OCV), R is the internal resistance that changes with every different charge/discharge status and SOC. The parameters $K_1$ to $K_4$ are defined as matching parameters to be identified through battery experiments [34]. When combining the 3 previous equations, the output equation is obtained as follows:

$$y_k = K_0 - Ri_k - \frac{K_1}{x_k} - K_2.x_k + K_3.\ln(x_k) + K_4.\ln(1 - x_k) \tag{4}$$

More complex models have been developed to explain the electrochemical behaviour of batteries for the application of electric vehicles; some of them were explained by Fotouhi et al. [35] in 2016 and are based on diffusion processes. It is essential to mention that although electrochemical models can mathematically explain the operation of the battery on a microscopic scale, the complexity of the system of differential equations

25152947, 0, Downloaded from https://ietresearch.onlinelibrary.wiley.com/doi/10.1049/stg2.12101 by Tallinn University of Technology, Wiley Online Library on [07/02/2023]. See the Terms and Conditions (https://onlinelibrary.wiley.com/terms-and-conditions) on Wiley Online Library for rules of use; OA articles are governed by the applicable Creative Commons License

and the identification of parameters are the most challenging tasks, for which some researchers have considered continuing to simplify the models [35].

## 3.2 | Equivalent circuit model (ECM)

As mentioned in the previous paragraph, due to the complexity of electrochemical models, the scientific community has been investigating new methodologies to explain the battery modelling approach for EVs; one of them is the Equivalent Circuit Model, which is constructed by putting capacitors, resistors, and voltage sources in the circuit [35]. The internal resistance model is considered as the simplest representation of the ECM for battery modelling, which can be represented in Figure 4.

Adding the Resistance–Capacitor element (RC) in the circuit is another approach that considers polarisation characteristics; it is called 'Thevenin Model' and is represented in Figure 5.

$V_t$ is the battery terminal voltage, $I_L$ is the load current, $V_{oc}$ is the Open Circuit Voltage (OCV), $R_p$ and $C_p$ are the equivalent resistors and capacitors, and finally, $R_o$ is defined as the internal resistance.

The mathematical equation that is applied to the Thevenin model in the frequency domain is given by [35]

$$V_t(s) = V_{oc}(s) - I_L(s).\left(R_0 + \frac{R_p}{1 + R_p C_p s}\right) \tag{5}$$

In the ECM structure, the determination of model parameters must be considered and there are some useful methods to potentially accomplish this task; one of them was firstly proposed in 1998 by Haran et al. and implemented by Kuhn et al. in 2006 [36, 37], which is known as the Electrochemical Impedance Spectroscopy (EIS). In this method, the electrochemical impedance from the equivalent circuit plays a fundamental role and is defined as the response of an electrochemical system to an applied potential [35].

The equivalent impedance is described by the following equation:

$$Z_e = R_0 + \frac{R_1}{1 + jwR_1C_1} \tag{6}$$

The variable $R_o$ is the initial resistance, $j$ is the imaginary number, $w$ is the frequency, and the elements $R_1$ and $C_1$ are the elements of the RC system. The first implemented ECM using the electrical interconnections method was developed by Edward Randles in 1947 and shows each corresponding element, which is related to a component in the cell [35]. A representation of the Randless circuit is illustrated in Figure 6.

Before concluding with this section, it is essential to point out that a detailed explanation on ECM, providing a mathematical formalism and validating the accuracy of the results, has been proposed by several authors and can be found in the References section [38].

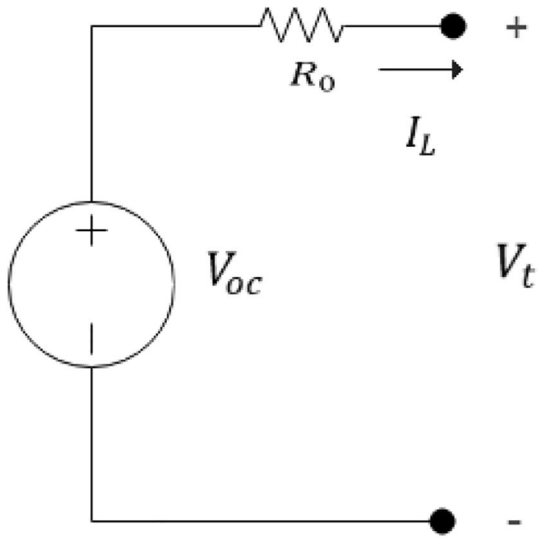


**FIGURE 4** Representation of the internal resistance battery model. Elements of the model are integrated by a resistance $R_0$ and an ideal battery voltage $V_{OC}$.

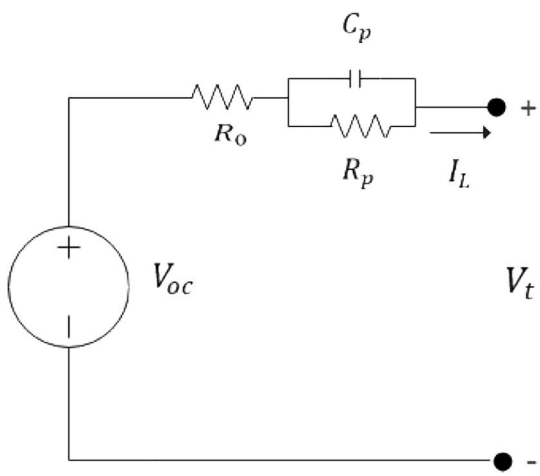


**FIGURE 5** Representation of the Thevenin Battery Model. Elements of the model are integrated by a Resistance–Capacitor element [33].

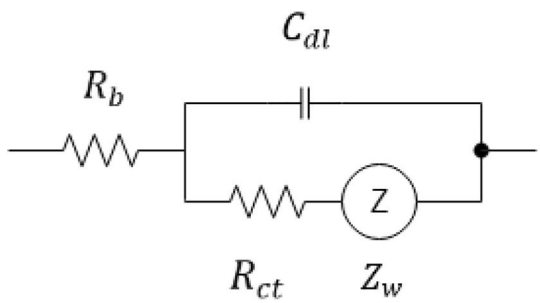


**FIGURE 6** Randless circuit representation and elements using the electrical interconnections method.

## 3.3 | Mathematical models

Black box battery models, also known as Mathematical models, are based on the application of Artificial Intelligence Algorithms

25152947, 0, Downloaded from https://ietresearch.onlinelibrary.wiley.com/doi/10.1049/stg2.12101 by Tallinn University of Technology, Wiley Online Library on [07/02/2023]. See the Terms and Conditions (https://onlinelibrary.wiley.com/terms-and-conditions) on Wiley Online Library for rules of use; OA articles are governed by the applicable Creative Commons License

and can be classified into 2 categories: stochastic and analytical models.

Regarding analytical models, few equations are used to describe the behaviour of the battery and its properties; one example was developed by Manwell et al. and is known as the Kinetic Battery Model (KiBaM) [38]. In this model, the system is described using a chemical kinetics process that reflects many of the observed properties in the deep-cycle lead acid batteries, specifically used for charging and discharging processes, assuming that the charges can be stored in two different manners: immediately available or chemically bounded [38]. The mathematical equations are given by

$$V = E - IR_0 \tag{7}$$

The parameters $I$ are the discharge current and $R_0$ are internal resistance. $E$ is defined as the internal voltage and is calculated using the following equation:

$$E = E_0 + AX + \frac{CX}{D - X} \tag{8}$$

The parameter $A$ reflects the initial variation of the battery voltage in the state of charge, C and D explain the decrease of the battery voltage when the battery is discharged, $X$ is the normalised charge removed from the battery, and $E_0$ is known as the internal battery voltage of the fully charged battery [39]. A detailed explanation of the KiBaM can be found in Ref. [38].

Several authors have proposed other types of models to predict battery lifetime, such as Peukert's law and the Rakhmatov and Vrudhula; the first is considered as the simplest model that considers non-linear properties, and the second describes a diffusion process through differential equations and boundary conditions [39].

Regarding the Stochastic Models, it is important to mention that the discharging and recovery effects are described as stochastic processes. Chiasserini and Rao proposed the first stochastic model in the period 1999–2001 that was based on discrete Markov chains [37]. In the first stochastic model, the battery is described by N + 1 states from 0 to N, in which every state represents the number of charge units available in the battery, and the variable $N$ indicates the number of charge units based on the continuous usage [37]. The probability that a charging unit is consumed can be represented by the expression $a_1 = q$ or recovery of one unit of charge is defined as $a_0 = 1 - q$. A graphical representation can be appreciated in Figure 7.

An extension of the model was developed and applied to the initial Kinetic Battery Model, and in this case, two new aspects are considered: (1) a maximum of M charge units can be consumed (M ≤ N) and (2) no consumption or recovery takes place during a time step, which is mathematically represented by a non-zero probability at the same state [39].

The probability is represented by the parameter $q_i$, $i$ is defined as the requested charge units. In the same way, during the idle periods, the battery has two possibilities, either with

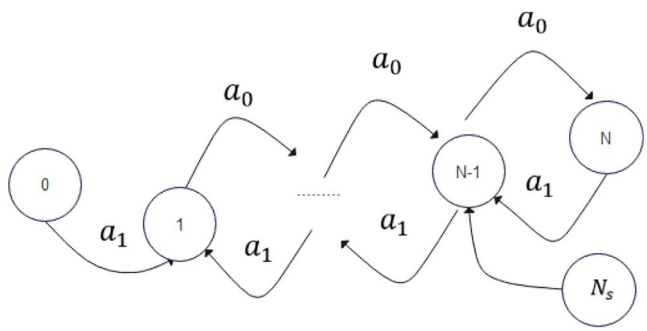


**FIGURE 7** Graphical representation of the basic Markov model proposed by Chiasserini and Rao [39].

the probability of recovery $p_j(f)$ or is found in the same state with probability $r_j(f)$. The mathematical expression is represented by the equation [40]:

$$p_j(f) = q_0 e^{(N-j)g_N - g_c(f)} \tag{9}$$

The recovery probability of state and phase is represented by the variables $j$ and $f$, respectively. The variables $g_N$ and $g_C(f)$ are known as exponential decay coefficients; the first one is related to the cell conductivity and the second to the cell potential drop during the discharge phase [40]. The complete methodology of the stochastic model focussed on battery management can be found in Ref. [40].

The evolution of Artificial Intelligence algorithms has been increasing and generating the application of Data Driven models. In 2021, Avadhanula and Kulkarni published an article comparing the battery performance and parameter estimation using some data-driven models; the most relevant were Support Vector Machine, Linear Regression, and ANNs [41]. Results from the investigation showed that the application of ANNs demonstrated the best performance to optimise the SOC of the battery system; however, XG boost and Fuzzy logic algorithms are also other alternatives to achieve satisfactory accuracy [41].

It is fundamental to select the most appropriate model; thus, the factors to consider are listed as follows [11].

- Number of parameters
- Computation time
- Accuracy
- Battery dynamics represented by the model
- Ease of understanding and complexity for implementation

To conclude with this section, a summary of the most important contributions and drawbacks of the current models are given in Figures 8–10.

## 4 | DIGITAL TWINS FOR BATTERIES – EXAMPLES AND TRENDS

Several authors have proposed the application of DTs for ESS and renewable technologies to promote climate change mitigation. However, it is fundamental to point out that there are

25152947, 0, Downloaded from https://ietresearch.onlinelibrary.wiley.com/doi/10.1049/stg2.12101 by Tallinn University of Technology, Wiley Online Library on [07/02/2023]. See the Terms and Conditions (https://onlinelibrary.wiley.com/terms-and-conditions) on Wiley Online Library for rules of use; OA articles are governed by the applicable Creative Commons License

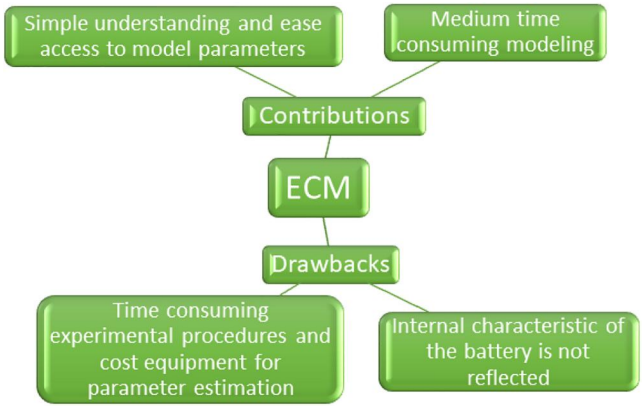


**FIGURE 8** Contributions and drawbacks of the equivalent circuit model [5, 6, 42].

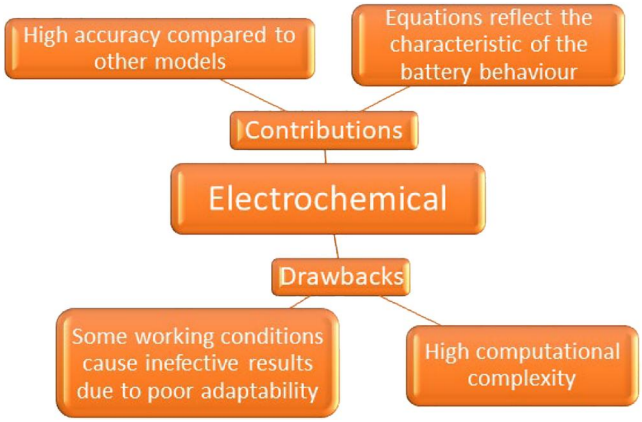


**FIGURE 9** Contributions and drawbacks of the Electrochemical model [34, 35, 42].

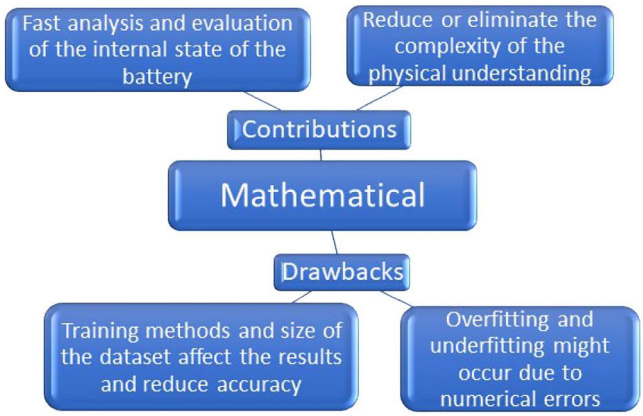


**FIGURE 10** Contributions and drawbacks of the Mathematical model [40–42].

specific components that play a fundamental role in the battery; one of them is the BMS.

The BMS is defined as the central element that protects, monitors and ensures safety, efficiency, and reliability [11]. Measurements of the BMS are executed for cell voltages, pack voltage, and pack temperature and provide estimations of the SOC, SOH, and Depth of Charge (DOC) [43]. The functionalities of the DT in parallel with the application of an integrated BMS work with a battery data storage platform.

In 2020, two investigations were conducted to determine the application of DT for battery systems; one of them, carried out by Li et al. [9], was focussed on the current SOC and SOH, whereas the other investigation presented by Wu et al. [10] provides an overview about data-driven perspectives in parallel with vehicle diagnostics and battery modelling.

The study conducted by Wu et al. introduces the application of hybrid models, which are defined as models that combine the best aspects of data-driven and physics-based models, using real-time data collection obtained from IoT. From the scientific point of view, physics-based models consider a set of differential equations that describe the physical degradation of the battery and have many advantages with the estimation of anode potential for fast charging algorithms the most favourable. The main beneficial application of hybrid models in combination with ANNs is the fast optimisation of the algorithm and increasing accuracy. However, future opportunities are also important to consider, which are listed in the following [23].

- Standardised and transparent data: Testing and data preprocessing are an essential part of the modelling, data storage, and database management, all of these enable transparent and more accurate diagnostics.
- Combination of multiscale physics models and Machine Learning algorithms: The application of multiscale physics models offers the possibility to capture nano-scale effects and macroscopic metrics, which enable high fidelity of data generation and increase the accuracy of the algorithm.
- Development of new methodologies to assess lifetime estimation: Hybrid models are developed by implementing physics and data-driven approaches, which are considered promising methodologies to achieve real-time prediction not only to promote longer lifetime battery systems but also to open new ways of operating mechanisms. According to Ref. [23], a combination of deeper electrochemical insights and data-driven approaches is also a potential challenge due to the increased accuracy of the model.

Regarding the research conducted by Li et al. [9], a cloud BMS was presented for battery systems, estimating the SOC and SOH and improving computational power and data storage capability by cloud computing. A summary of the methodology is explained as follows [9]:

- *Cloud battery management system:* Based on the concept of IoT and cloud computing, a digital twin was built to improve the computational power, reliability, and data storage capability of the BMS. The battery interface consists of six subsystems, which are (1) Battery System for Data Generation, (2) BMS-Slave for Data Sensing, (3) IoT component used for Data Collection, (4) Cloud for Data

25152947, 0, Downloaded from https://ietresearch.onlinelibrary.wiley.com/doi/10.1049/stg2.12101 by Tallinn University of Technology, Wiley Online Library on [07/02/2023]. See the Terms and Conditions (https://onlinelibrary.wiley.com/terms-and-conditions) on Wiley Online Library for rules of use; OA articles are governed by the applicable Creative Commons License

Storage purposes, (5) Application Programming Interface (API) for user interface and Data Analytics, and (6) User Interface (UI) for Data Visualisation.

- *Battery modelling:* The ECM was implemented to model the battery dynamics; it is based on the extended Thevenin model for estimating the SOC and SOH with adaptive extended H-infinity filter (AEHF) and particle swarm optimisation (PSO).
- *SOC and SOH estimations:* To validate the PSO and AEHF algorithms, some ageing tests were carried out for both hardware and software; a UPS system was connected with the cloud BMS prototype, and finally, a Battery test bench for lead-acid and lithium-ion batteries was connected with the cloud BMS to validate the SOC and SOC estimations.

In 2021, Singh et al. [11] conducted a scientific study that identifies the efforts to implement a Battery Digital Twin; among the most important benefits of the DT and the onboard integrated BMS are the following: (1) evaluating battery, (2) ageing indicators, (3) optimal charging strategy, (4) thermal management, and (5) fault diagnosis.

The contributions of Singh's implementation are listed and described as follows [11]:

- *Functionalities and implementations of the DT during the battery operation*: In this case, the benefits are integrated into the mechanism and the operating system, such as the performance estimation, optimisation strategies, and improved representation, all from an electrical or electrochemical perspective.
- *Approach and challenges*: An innovative approach that moves from a battery model to a battery DT was proposed, which was based on the five next steps: (1) Experimental parameter identification for model development, (2) Charge/Discharge cycle data, (3) Model Parameter update Estimation, (4) Adaptative Model Update, and (5) Battery Digital Twin Key Performance Indicators (KPI) Quantification. The differences between a battery digital twin and a model were also mentioned, including a literature review of the DT and its applications not only in the industrial sector but also from the academic point of view. Regarding the challenges, two key issues were recognised: the first is the available battery operational data for the model and the second is the methodology to update the model parameters.
- *Future research*: Some topics showed promising results but are considered unresolved; therefore, further research is encouraged in the coming years. The level of fidelity expected from a DT battery is a point of interest due to electrical, thermal, electrochemical, and ageing aspects, which is related to the improvement of cost operation. Technical installation and life cycle assessment are other areas of opportunity due to the docking process, sensor deployment, and manufacturing. Finally, the accuracy of behaviour prediction using a DT battery is within the scope of the research community according to the comparison of the percentage error in the DT estimates, being a focus in future research.

It is important to mention that a solid understanding of the EVs and ESS technologies must be considered not only to provide the optimal mechanism of the battery but also to identify future trends and opportunity areas in the energy market.

In Section 5, a discussion about the promising applications of DTs of batteries for EVs will be given; additionally, a summary of the future trends and opportunity areas will be mentioned. Finally, a conclusion that highlights the continuation of this research is encouraged in Section 6.

## 5 | DISCUSSION

Currently, the development of the DT has promoted the implementation of different battery technologies, focussed on the SOC and SOH indicators by influencing BMS core functionalities and life cycle assessment of the ESS. Latest trends show that specific implementation methods and algorithms have been proposed to monitor some functionalities of the DT; among the most important, we find discharge capacity [44], cell voltage and temperature [43], SOC and SOH estimations, and capacity fade [9, 44]. In 2021, Weeber et al. [11] conducted a scientific research to provide an overview of the DT implementation for battery systems, which describes different methodologies not only to monitor the real-time battery data modelling through cloud services but also to validate the state estimation algorithm.

In 2020, Onori et al. [45] conducted a research to provide a review on Fault Mechanisms, Diagnosis Procedures, and Fault Features in Li-ion battery systems. It was mentioned that Fault Diagnostic Systems are essential technologies that involve the application of advanced mathematics, information theory, and computational algorithms, discussing the advantages and disadvantages of each algorithm with the aim of stimulating new ideas for Li-ion batteries fault diagnostics.

Regarding the energy and sustainability applications of batteries for EVs, operating conditions play the most important role in the system. However, a functioning mechanism might be affected by both external conditions and internal parameters. The maintenance of the battery system is a point of concern that ensures the reliability and safety of the EV; thus, a continuous monitoring of the operating system must be executed to assure an optimal performance. Predictive maintenance, fault detection, and health monitoring are the points of concern that require a solid understanding of the battery system, which determine the lifetime prediction over an extended period of time. Consequently, DT technology can be integrated to strengthen and optimise the mechanism of the battery.

The promising application of the DT technology can also be extended to more complex systems that will lead to a new and sustainable future around the world; one of them is Smart Grid, which is currently under development due to innovative methodologies of power system generation, distribution, transmission, and consumption. In 2021, Jiang et al. [46] conducted a research to provide a new reference for the

25152947, 0, Downloaded from https://ietresearch.onlinelibrary.wiley.com/doi/10.1049/stg2.12101 by Tallinn University of Technology, Wiley Online Library on [07/02/2023]. See the Terms and Conditions (https://onlinelibrary.wiley.com/terms-and-conditions) on Wiley Online Library for rules of use; OA articles are governed by the applicable Creative Commons License

application of DT in Smart Grids. Due to the complexity of the physical world based on the Smart Grid architecture, the Digital Twin Body must highlight the local characteristics of the system under different requirements, promoting the intelligence that reflects and predicts the transmission interaction between the virtual and physical entities.

Table 1 summarises the major challenges for each topic that have been discussed based on the accomplishments and novelties of the research.

## 6 | CONCLUSION

Energy and sustainability issues are the points of interest for industrial and research organisations around the world, all this to promote the most optimal supply and demand of energy sources. The path to energy transition has caused many changes and encouraged the current development of powerful technologies and intelligent algorithms, being the DT one of the most prominent due to the accurate prediction, safety, and diagnosis of the system.

It has been stated that different models can be implemented for the optimal functioning of BESS; however, there are specific advantages and disadvantages that must be considered, such as understanding the battery behaviour, available datasets, accuracy, computational complexity etc. In order to select the most appropriate battery model, the needs of the user must be known, and system restrictions and operating conditions of the battery are required to develop the algorithm and implement the functioning mechanism. The result comparison with different types of algorithms is an approach to validate the performance of each model, which can determine the optimal feature selection and parameter estimation. However, input parameters, available datasets, and battery standards will play the most fundamental role depending on the user needs.

**TABLE 1** Major challenges regarding the Energy Storage System (ESS) implementation, battery modelling for electric vehicles (EVs), and digital twin applications for a BESS.

| Topic | Challenges |
|---|---|
| 1. ESS and battery technologies | • Optimisation of the health and charge indicators<br>• Manufacturing, operation, and re-utilisation management<br>• Performance of energy components using artificial intelligence |
| 2. Battery models for EVs | • Accuracy of the selected model based on battery properties<br>• Reducing computational complexity<br>• Experimental procedures for testing purposes |
| 3. Digital twins for batteries | • Development of new methodologies to provide lifetime assessment<br>• Parameter selection based on customer needs and modelling<br>• Transparent data and processing to achieve accurate diagnostics |

This work is the basis of the BESS modelling and can be developed to implement algorithms for a BMS to determine their parameter values from lab-test data and how to use them to simulate cell behaviours under different load profiles for EV applications. Moreover, this work provides a research environment for the development of a DT of battery energy storage systems for analysis, investigation, and online simulation in EVs. This will help establish assessment and verification procedures for possible fault diagnostics to support commercial consulting, research, and testing for enterprises based on the digital twin concept.

The main directions for future research are based on Data-Driven approaches considering the battery models discussed in this article, in which the performance of mathematical models, ECM, and Electrochemical models will be implemented using technological tools, such as Simulink and PyBaMM. The Data Mining techniques will illustrate the KPIs of BESSs; after that, it will be required to implement machine learning algorithms to assess the battery degradation based on supervised and unsupervised outcomes. Future work will be based on the validation of the previous models according to experimental measurements and battery tests. Once the KPIs have been obtained, predictive maintenance and fault diagnosis will be the point of interest to monitor the lifetime assessment and develop the BMS before the initialisation of the DT.

Finally, the implementation of the corresponding computational algorithms, the BESS models, and the performance of the EV based on Health and Charge indicators are the topics that will be addressed in the next research. Therefore, it is recommended to continue with this work and consider it as a basis for initial understanding of the promising challenges of the energy transition.

## NOMENCLATURE

| | |
|---|---|
| $C_p$ | equivalent capacitors |
| $E$ | internal voltage |
| $E_0$ | open voltage circuit |
| $\mathbf{i_k}$ | instantaneous current at time 'k' |
| $I_l$ | load current |
| R | internal resistance |
| $R_0$ | internal resistance |
| $R_p$ | equivalent resistors |
| $V_t$ | battery terminal voltage |
| $x_k$ | number of state vectors |
| $\mathbf{y_k}$ | voltage of the battery |
| $Z_e$ | equivalent impedance |

## AUTHOR CONTRIBUTIONS

**Rolando Gilbert Zequera**: Writing – original draft; Writing – review and editing. **Anton Rassõlkin**: Funding acquisition; Project administration; Supervision. **Toomas Vaimann**: Supervision. **Ants Kallaste**: Supervision.

## ACKNOWLEDGEMENTS

The research has been supported by the Estonian Research Council under grant PSG453 'Digital twin for propulsion drive of autonomous electric vehicle'.

25152947, 0, Downloaded from https://ietresearch.onlinelibrary.wiley.com/doi/10.1049/stg2.12101 by Tallinn University of Technology, Wiley Online Library on [07/02/2023]. See the Terms and Conditions (https://onlinelibrary.wiley.com/terms-and-conditions) on Wiley Online Library for rules of use; OA articles are governed by the applicable Creative Commons License

## CONFLICT OF INTEREST STATEMENT

The author declares that there is no conflict of interest that could be perceived as prejudicing the impartiality of the research reported.

## DATA AVAILABILITY STATEMENT

Data sharing is not applicable to this article as no new data were created or analysed in this study.

## ORCID

*Rolando Gilbert Zequera* https://orcid.org/0000-0002-2052-8481

## REFERENCES


1. Sanguesa, J.A., et al.: A review on electric vehicles: technologies and challenges. Smart Cities. 4(1), 372–404 (2021). https://doi.org/10.3390/smartcities4010022
2. Arif, S.M., et al.: Review of electric vehicle technologies, charging methods, standards and optimization techniques. Electronics. 10, 1–21 (2021)
3. Barkenbus, J.N.: Prospects for electric vehicles. Sustainability. 12(14), 1–13 (2020). https://doi.org/10.3390/su12145813
4. Green Car Reports: Lithium-Ion Battery Packs Now 209 Per Kwh. Will Fall to 100 by 2025: Bloomberg Analysis. Available online: https://www.greencarreports.com/news/1114245_lithium-ion-battery-packs-now-209-per-kwh-will-fall-to-100-by-2025-bloomberg-analysis
5. Saldaña, G., et al.: Analysis of the current electric battery models for electric vehicle simulation. Energies. 12(14), 1–27 (2019). https://doi.org/10.3390/en12142750
6. Campagna, N., et al.: Battery models for battery powered applications: A comparative study. Energies. 13(16), 1–26 (2020). https://doi.org/10.3390/en13164085
7. Jones, D., et al.: Characterising the digital twin: a systematic literature review. CIRP J. Manuf. Sci. Technol. 29, 36–52 (2020). https://doi.org/10.1016/j.cirpj.2020.02.002
8. Stark, R., Damerau, T.: Digital Twin. Springer Berlin Heidelberg, Berlin (2019). https://doi.org/10.1007/978-3-642-35950-7_16870-1
9. Li, W., et al.: Digital twin for battery systems: cloud battery management system with online state-of-charge and state-of-health estimation. J. Energy Storage. 30, 1–12 (2020). https://doi.org/10.1016/j.est.2020.101557
10. Wu, B., et al.: Battery digital twins: perspectives on the fusion of models, data and artificial intelligence for smart battery management systems. Energy AI. 1, 100016(2020). https://doi.org/10.1016/j.egyai.2020.100016
11. Singh, S., Weeber, M., Birke, K.P.: Implementation of battery digital twin: Approach, functionalities and benefits. Batteries. 7(4), 1–21 (2021). https://doi.org/10.3390/batteries7040078
12. Bhatti, G., Mohan, H., Raja Singh, R.: Towards the future of smart electric vehicles: digital Twin Technology. Renew. Sustain. Energy Rev. 141, 1–18 (2021). https://doi.org/10.1016/j.rser.2021.110801
13. Andwari, A.M., et al.: A review of battery electric vehicle technology and readiness levels. Renew. Sustain. Energy Rev. 78, 414–430 (2017). https://doi.org/10.1016/j.rser.2017.03.138
14. Barik, A.K., Das, D.C.: Integrated resource planning in sustainable energy-based distributed microgrids. Sustain. Energy Technol. Assessments. 48, 1–13 (2021). https://doi.org/10.1016/j.seta.2021.101622
15. Vandana, et al.: Multi-dimensional digital twin of energy storage system for electric vehicles: a brief review. Energy Storage WILEY, 3, 1–14 (2021)
16. Murthy, et al.: Overview of battery management systems in electric vehicles. E-Mobility, 8, 137–147 (2022)
17. Electrical Energy Storage. White Paper. The International Electrotechnical Commission. (IEC), Geneva, Switzerland; 201
18. Fujihara, T., Himano, H., Oshima, K.: Development of pump turbine for seawater pumped-storage power plant. Hitachi Rev. 47(5), 199–202 (1998)
19. Duvall, M., Alexander, M.: Batteries for Electric Drive Vehicles - Status 2005: Performance, Durability, and Cost of Advanced Batteries for Electric, Hybrid Electric, and Plug-In Hybrid Electric Vehicles. Electr Power Res Inst (2005). [November]
20. Dhameja, S.: Electric Vehicle Battery Systems. Newnes publication, Butterworth–Heinemann, USA (2002)
21. Vazquez, S., et al.: Energy storage systems for transport and grid applications. IEEE Trans. Ind. Electron. 57(12), 3881–3895 (2010). https://doi.org/10.1109/tie.2010.2076414
22. Hannan, M.A., et al.: Review of energy storage systems for electric vehicle applications: Issues and challenges. Energies. 69, 771–789 (2017). https://doi.org/10.1016/j.rser.2016.11.171
23. Guo, J., et al.: Lithium-ion battery operation, degradation, and aging mechanism in electric vehicles: an overview. Energies 14(17), 1–22 (2021). https://doi.org/10.3390/en14175220
24. Koo, B., et al.: Modeling the performance of a zinc/bromine Flow battery. Energies. 12(6), 1–13 (2019). https://doi.org/10.3390/en12061159
25. Zhang, C., et al.: Energy storage system: current studies on batteries and power condition system. Renewable and sustainable. Energy Rev. 82, 3091–3106 (2018). https://doi.org/10.1016/j.rser.2017.10.030
26. Sessa, S.D., et al.: Sodium nickel chloride battery steady-state regime model for stationary electrical energy storage. J. Energy Storage. 6, 105–115 (2016). https://doi.org/10.1016/j.est.2016.03.005
27. Cleantechnica: Sodium-Air Batteries May Best Lithium-Air Batteries (2013). Available online: https://cleantechnica.com/2013/03/20/sodium-air-batteries-may-best-lithium-air-batteries/. Accessed 21 February 2021
28. Energy Storage Inter-Platform Group: State of the Art of Energy Storage Regulations and Technology. Available online: http://www.futured.es/wp-content/uploads/2016/06/GIA-Maqueta_eng.pdf. Accessed 21 February 2021
29. Phys.org: Sodium-Air Battery Offers Rechargeable Advantages Compared to Li-Air Batteries. Available online: https://phys.org/news/2013-01-sodium-air-battery-rechargeable-advantages-li-air.html (2013). Accessed 21 February 2022
30. Zhao-Karger, Z., Fichtner, M.: Magnesium–sulfur battery: its beginning and recent progress. MRS Commun. 7(4), 770–784 (2017). https://doi.org/10.1557/mrc.2017.101
31. Panahi, D., et al.: Forecasting plug-in electric vehicles load profile using artificial neural networks. In: Proceedings of the **2015** Australasian Universities Power Engineering Conference (AUPEC). Wollongong, Australia, 27–30 September, pp. 1–6 (2015)
32. Jungst, R.G.: Recycling of electric vehicle batteries. In: Pistoia, G., Wiaux, J.P., Wolsky, S. (eds.), Used Battery Collection and Recycling, vol. 10, pp. 295–32. Elsevier, Amsterdam (2001)
33. Tamilsevi, S., et al.: A review on battery modelling techniques. Sustainability. 13, 1–26 (2021)
34. Ding, N., et al.: State of charge estimation of a composite lithium-based battery model based on an improved extended kalman filter algorithm. Inventions. 4, 66 (2019). https://doi.org/10.3390/inventions4040066
35. Fotouhi, A., et al.: Review on electric vehicle battery modelling: from Lithium-ion toward Lithium–Sulphur. Renew. Sustainable Energy Rev. 56, 1008–1021 (2016). https://doi.org/10.1016/j.rser.2015.12.009
36. Haran, B.S., Popov, B.N., White, R.E.: Determination of the hydrogen diffusion coefficient in metal hydrides by impedance spectroscopy. J. Power Sources. 75(1), 56–63 (1998). https://doi.org/10.1016/s0378-7753(98)00092-5
37. Kuhn, E., et al.: Modelling Ni-mH battery using Cauer and Foster structures. J. Power Sources. 158(2), 1490–1497 (2006). https://doi.org/10.1016/j.jpowsour.2005.10.018
38. ManwellJ, M.G.J.: Lead acid battery storage model for hybrid energy systems. Sol. Energy. 50(5), 399–405 (1993). https://doi.org/10.1016/0038-092x(93)90060-2


25152947, 0, Downloaded from https://ietresearch.onlinelibrary.wiley.com/doi/10.1049/stg2.12101 by Tallinn University of Technology, Wiley Online Library on [07/02/2023]. See the Terms and Conditions (https://onlinelibrary.wiley.com/terms-and-conditions) on Wiley Online Library for rules of use; OA articles are governed by the applicable Creative Commons License

39. Jongerden, M.R., Haverkort, B.R.: Battery Modeling. Centre for Telematics and Information Technology, University of Twente.TR-CTI (2008)
40. Chiasserini, C.F., Rao, R.: Energy efficient battery management. IEEE J. Sel. Area. Commun. 19(7), 1235–1245 (2001). https://doi.org/10.1109/49.932692
41. Avadhanula, A.K., Kulkarni, S.S.: Comparative Study of Mathematical Models and Data Driven Models for Battery Performance Parameter Estimation, pp. 1–5. IEE (2021)
42. Zhou, W., et al.: Review on the battery model and SOC estimation method. Processes, 9, 1–23 (2021)
43. Balasingam, B., Ahmed, M., Pattipati, K.: Battery management systems—challenges and some solutions. Energies. 13(11), 2825 (2020). https://doi.org/10.3390/en13112825
44. Qu, X., et al.: Lithium-ion battery performance degradation evaluation in dynamic operating conditions based on a digital twin model. Microelectron. Reliab. 114, 113857 (2020). https://doi.org/10.1016/j.microrel.2020.113857
45. Hu, X., et al.: Advanced fault diagnosis for lithium-ion battery systems. IEEE Ind. Electron. Mag. 14, 65–91 (2020)
46. Jiang, Z., Lv, H., Guo, Y.: A novel application architecture of digital twins in smart gridJ. Ambient Intell. Hum. Comput.1172020

**How to cite this article:** Gilbert Zequera, R., et al.: Overview of battery energy storage systems readiness for digital twin of electric vehicles. IET Smart Grid. 1–12 (2023). https://doi.org/10.1049/stg2.12101

25152947, 0, Downloaded from https://ietresearch.onlinelibrary.wiley.com/doi/10.1049/stg2.12101 by Tallinn University of Technology, Wiley Online Library on [07/02/2023]. See the Terms and Conditions (https://onlinelibrary.wiley.com/terms-and-conditions) on Wiley Online Library for rules of use; OA articles are governed by the applicable Creative Commons License